감압표

2021.09.09

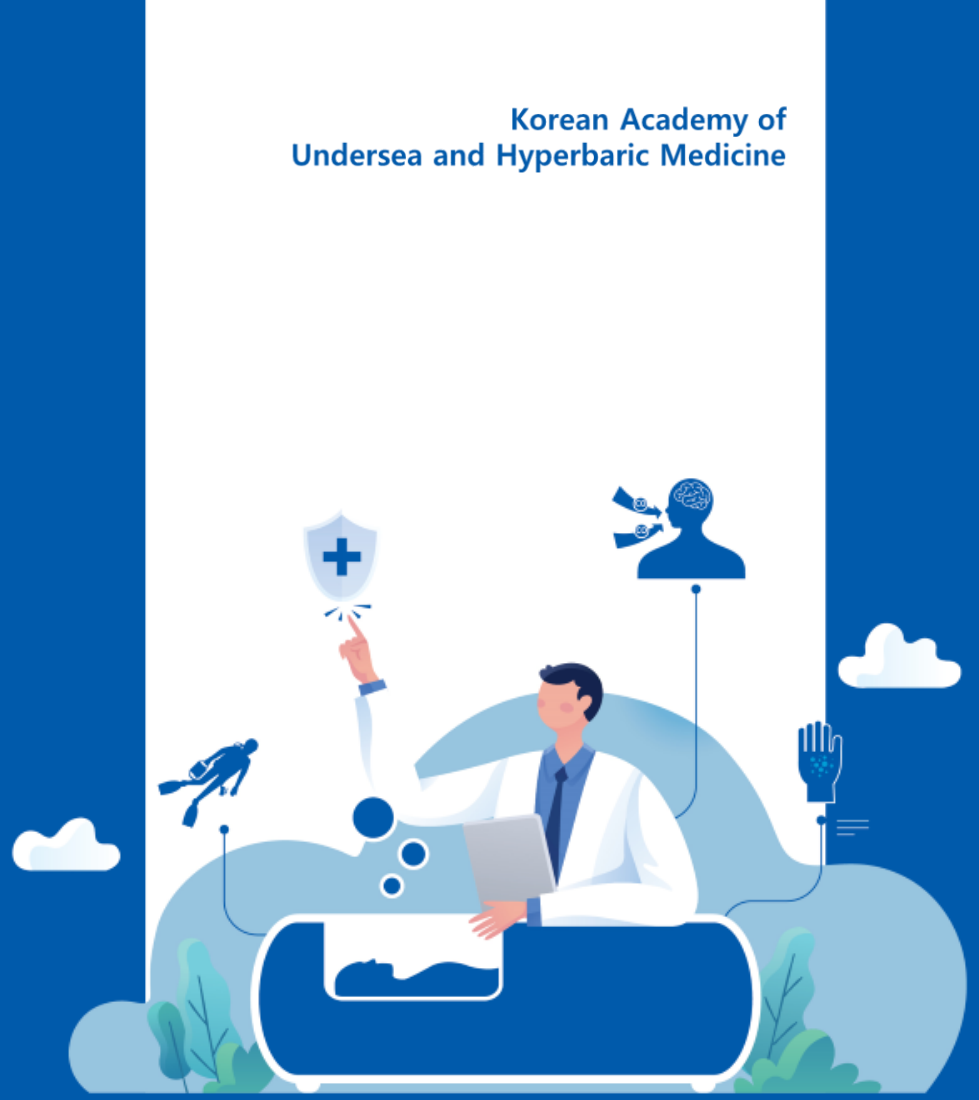

소 속 : 강릉아산병원 응급의학과, 고압산소치료센터
이 름 : 오 세 현 교수

대한고압의학회
Korean Academy of Undersea and Hyperbaric Medicine

Dive profile

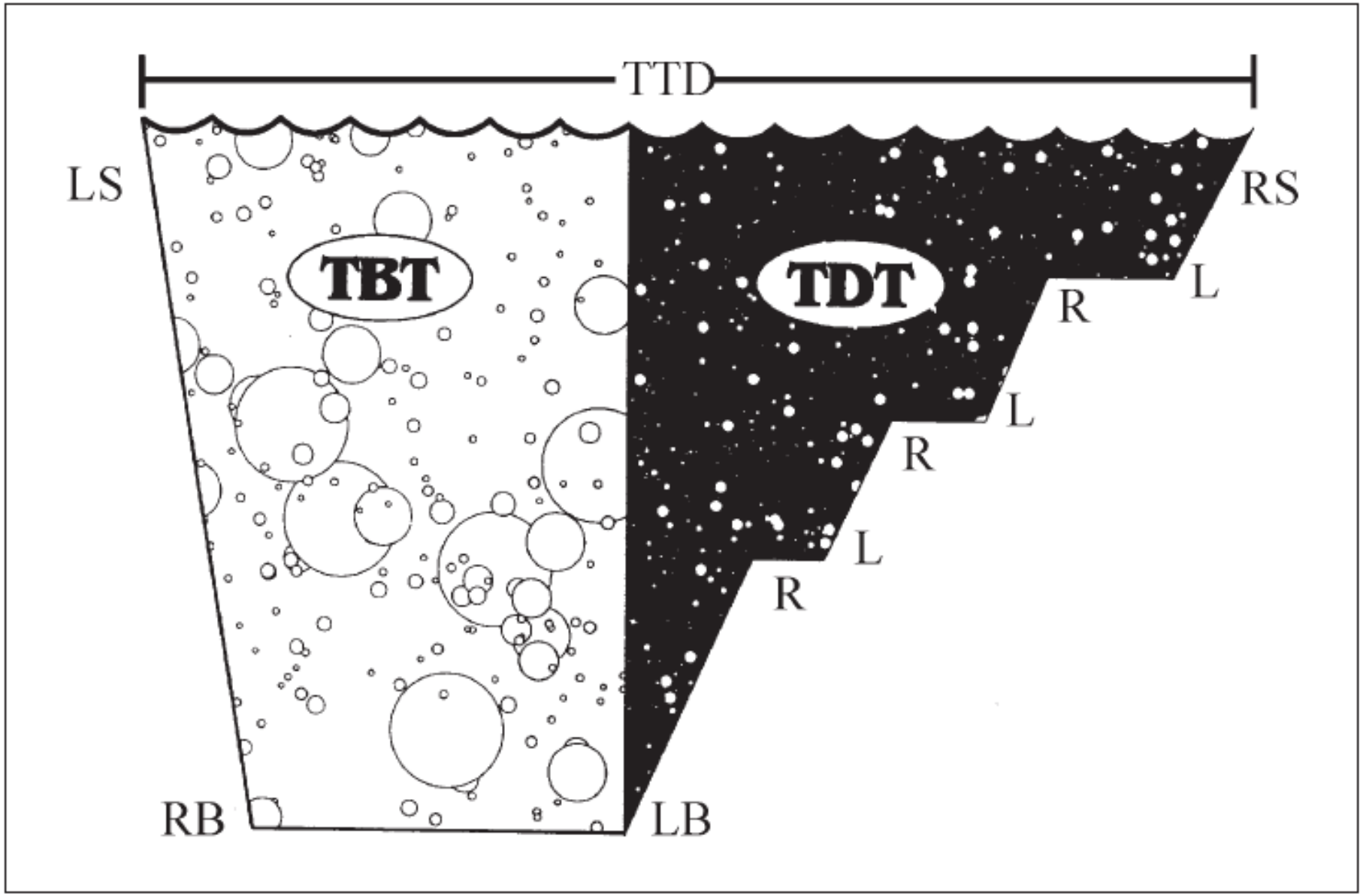

L: left
R: reached

S: surface
B: bottom

TBT: total bottom time
TDT: total decom.time
TTD: total time of diving

용어

- 일회잠수: 체내 잔여질소가 없는 상태에서의 잠수
- 반복잠수: 이전 잠수로 인하여 체내 잔여질소가 남아있는 상태에서의 잠수
- 표면간격(Surface Interval): 반복잠수 시 이전잠수와 다음잠수 사이 간격
- 비감압한계: 주어진 수심에서 감압정지가 필요없는 최대허용한계
- 잔여질소시간: 이전잠수로 체내에 남아있는 질소를 감안하여 반복잠수시 해저체류시간에 포함시키는 시간

표면간격(Surface Interval)

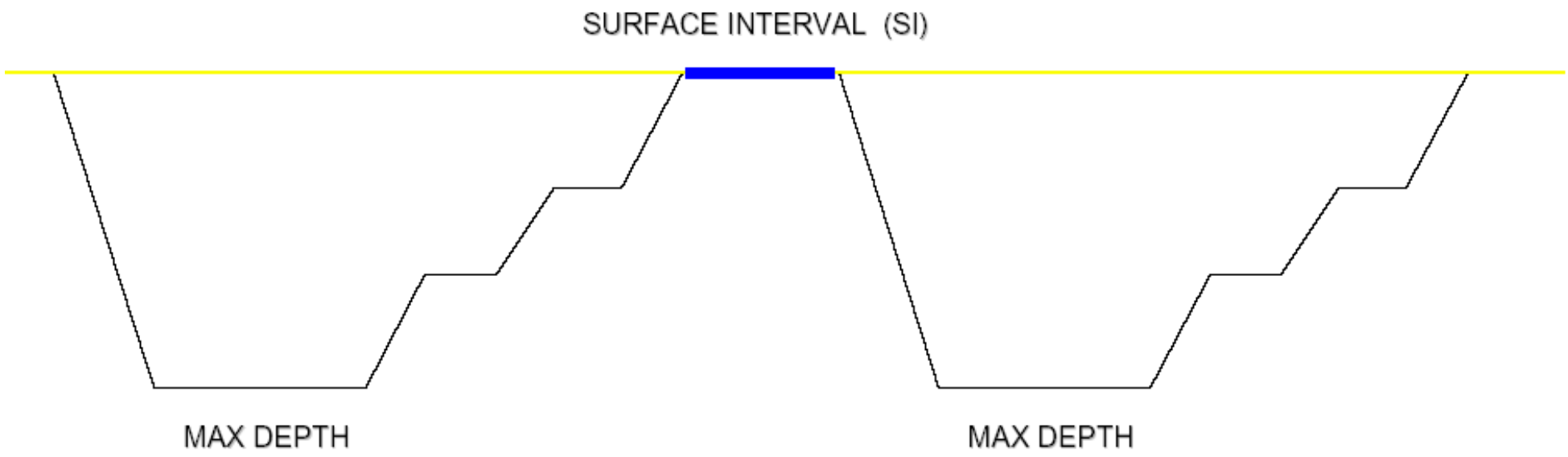

반복잠수(Repetitive Dive)

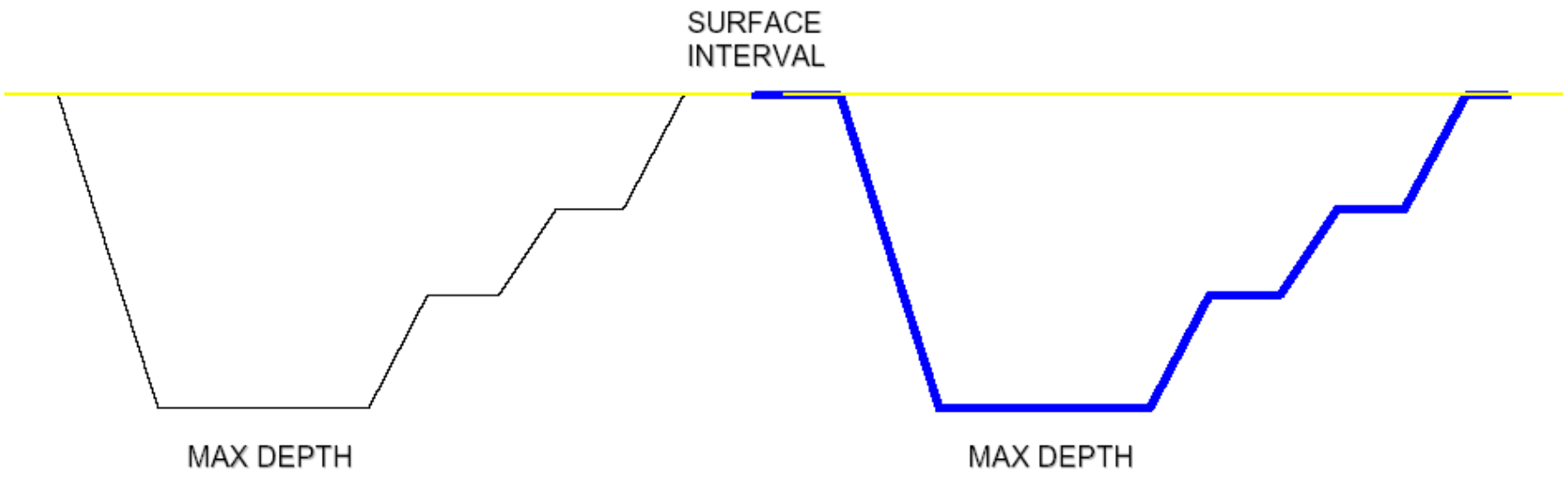

Equivalent Single Dive Time(ESDT)

이전 잠수의 잔여질소시간과 다음 잠수의 실제 해저체류시간의 합

Diver

Repeat Dive

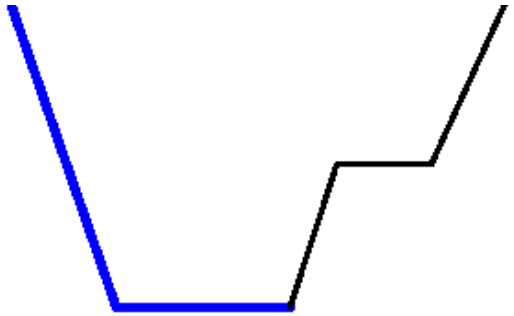

	RNT	+	TBT	=	ESDT
i.e.	5 MIN	+	8 MIN	=	13 MIN ESDT

비감압한계표

Depth (fsw)	No-Stop Limit	Repetitive Group Designation															
		A	B	C	D	E	F	G	H	I	J	K	L	M	N	O	Z
10	Unlimited	57	101	158	245	426	*										
15	Unlimited	36	60	88	121	163	217	297	449	*							
20	Unlimited	26	43	61	82	106	133	165	205	256	330	461	*				
25	1102	20	33	47	62	78	97	117	140	166	198	236	285	354	469	992	1102
30	371	17	27	38	50	62	76	91	107	125	145	167	193	223	260	307	371
35	232	14	23	32	42	52	63	74	87	100	115	131	148	168	190	215	232
40	163	12	20	27	36	44	53	63	73	84	95	108	121	135	151	163	
45	125	11	17	24	31	39	46	55	63	72	82	92	102	114	125		
50	92	9	15	21	28	34	41	48	56	63	71	80	89	92			
55	74	8	14	19	25	31	37	43	50	56	63	71	74				
60	63	7	12	17	22	28	33	39	45	51	57	63					
70	48	6	10	14	19	23	28	32	37	42	47	48					
80	39	5	9	12	16	20	24	28	32	36	39						
90	33	4	7	11	14	17	21	24	28	31	33						
100	25	4	6	9	12	15	18	21	25								
110	20	3	6	8	11	14	16	19	20								
120	15	3	5	7	10	12	15										
130	12	2	4	6	9	11	12										
140	10	2	4	6	8	10											
150	8		3	5	7	8											
160	7		3	5	6	7											
170	6			4	6												
180	6			4	5	6											
190	5			3	5												

Locate the diver's repetitive group designation from his previous dive along the diagonal line above the table. Read horizontally to the interval in which the diver's surface interval lies.

Next, read vertically downward to the new repetitive group designation. Continue downward in this same column to the row that represents the depth of the repetitive dive. The time given at the intersection is residual nitrogen time, in minutes, to be applied to the repetitive dive.

* Dives following surface intervals longer than this are not repetitive dives. Use actual bottom times in the Air Decompression Tables to compute decompression for such dives.

Repetitive Group at Beginning of Surface Interval

A															:10	2:20 *
B														:10	1:16	1:17 / 3:36 *
C													:10 / :55	:56 / 2:11	2:12 / 4:31 *	
D												:10 / :52	:53 / 1:47	1:48 / 3:03	3:04 / 5:23 *	
E											:10 / :52	:53 / 1:44	1:45 / 2:39	2:40 / 3:55	3:56 / 6:15 *	
F										:10 / :52	:53 / 1:44	1:45 / 2:37	2:38 / 3:31	3:32 / 4:48	4:49 / 7:08 *	
G									:10 / :52	:53 / 1:44	1:45 / 2:37	2:38 / 3:29	3:30 / 4:23	4:24 / 5:40	5:41 / 8:00 *	
H								:10 / :52	:53 / 1:44	1:45 / 2:37	2:38 / 3:29	3:30 / 4:21	4:22 / 5:16	5:17 / 6:32	6:33 / 8:52 *	
I							:10 / :52	:53 / 1:44	1:45 / 2:37	2:38 / 3:29	3:30 / 4:21	4:22 / 5:13	5:14 / 6:08	6:09 / 7:24	7:25 / 9:44 *	
J						:10 / :52	:53 / 1:44	1:45 / 2:37	2:38 / 3:29	3:30 / 4:21	4:22 / 5:13	5:14 / 6:06	6:07 / 7:00	7:01 / 8:16	8:17 / 10:36 *	
K					:10 / :52	:53 / 1:44	1:45 / 2:37	2:38 / 3:29	3:30 / 4:21	4:22 / 5:13	5:14 / 6:06	6:07 / 6:58	6:59 / 7:52	7:53 / 9:09	9:10 / 11:29 *	
L					:10 / :52	:53 / 1:44	1:45 / 2:37	2:38 / 3:29	3:30 / 4:21	4:22 / 5:13	5:14 / 6:06	6:07 / 6:58	6:59 / 7:50	7:51 / 8:44	8:45 / 10:01	10:02 / 12:21 *
M				:10 / :52	:53 / 1:44	1:45 / 2:37	2:38 / 3:29	3:30 / 4:21	4:22 / 5:13	5:14 / 6:06	6:07 / 6:58	6:59 / 7:50	7:51 / 8:42	8:43 / 9:37	9:38 / 10:53	10:54 / 13:13 *
N			:10 / :52	:53 / 1:44	1:45 / 2:37	2:38 / 3:29	3:30 / 4:21	4:22 / 5:13	5:14 / 6:06	6:07 / 6:58	6:59 / 7:50	7:51 / 8:42	8:43 / 9:34	9:35 / 10:29	10:30 / 11:45	11:46 / 14:05 *
O		:10 / :52	:53 / 1:44	1:45 / 2:37	2:38 / 3:29	3:30 / 4:21	4:22 / 5:13	5:14 / 6:06	6:07 / 6:58	6:59 / 7:50	7:51 / 8:42	8:43 / 9:34	9:35 / 10:27	10:28 / 11:21	11:22 / 12:37	12:38 / 14:58 *
Z	:10 / :52	:53 / 1:44	1:45 / 2:37	2:38 / 3:29	3:30 / 4:21	4:22 / 5:13	5:14 / 6:06	6:07 / 6:58	6:59 / 7:50	7:51 / 8:42	8:43 / 9:34	9:35 / 10:27	10:28 / 11:19	11:20 / 12:13	12:14 / 13:30	13:31 / 15:50 *

Repetitive Group at the End of the Surface Interval

Dive Depth	Z	O	N	M	L	K	J	I	H	G	F	E	D	C	B	A
10	**	**	**	**	**	**	**	**	**	**	**	427	246	159	101	58
15	**	**	**	**	**	**	**	**	450	298	218	164	122	89	61	37
20	**	**	**	**	**	462	331	257	206	166	134	106	83	62	44	27
25	†	†	470	354	286	237	198	167	141	118	98	79	63	48	34	21
30	372	308	261	224	194	168	146	126	108	92	77	63	51	39	28	18
35	245	216	191	169	149	132	116	101	88	75	64	53	43	33	24	15
40	188	169	152	136	122	109	97	85	74	64	55	45	37	29	21	13
45	154	140	127	115	104	93	83	73	64	56	48	40	32	25	18	12
50	131	120	109	99	90	81	73	65	57	49	42	35	29	23	17	11
55	114	105	96	88	80	72	65	58	51	44	38	32	26	20	15	10
60	101	93	86	79	72	65	58	52	46	40	35	29	24	19	14	9
70	83	77	71	65	59	54	49	44	39	34	29	25	20	16	12	8
80	70	65	60	55	51	46	42	38	33	29	25	22	18	14	10	7
90	61	57	52	48	44	41	37	33	29	26	22	19	16	12	9	6
100	54	50	47	43	40	36	33	30	26	23	20	17	14	11	8	5
110	48	45	42	39	36	33	30	27	24	21	18	16	13	10	8	5
120	44	41	38	35	32	30	27	24	22	19	17	14	12	9	7	5
130	40	37	35	32	30	27	25	22	20	18	15	13	11	9	6	4
140	37	34	32	30	27	25	23	21	19	16	14	12	10	8	6	4
150	34	32	30	28	26	23	21	19	17	15	13	11	9	8	6	4
160	32	30	28	26	24	22	20	18	16	14	13	11	9	7	5	4
170	30	28	26	24	22	21	19	17	15	14	12	10	8	7	5	3
180	28	26	25	23	21	19	18	16	14	13	11	10	8	6	5	3
190	26	25	23	22	20	18	17	15	14	12	11	9	8	6	5	3

Residual Nitrogen Times (Minutes)

미국 해양대기청
National Oceanic Atmospheric Administration

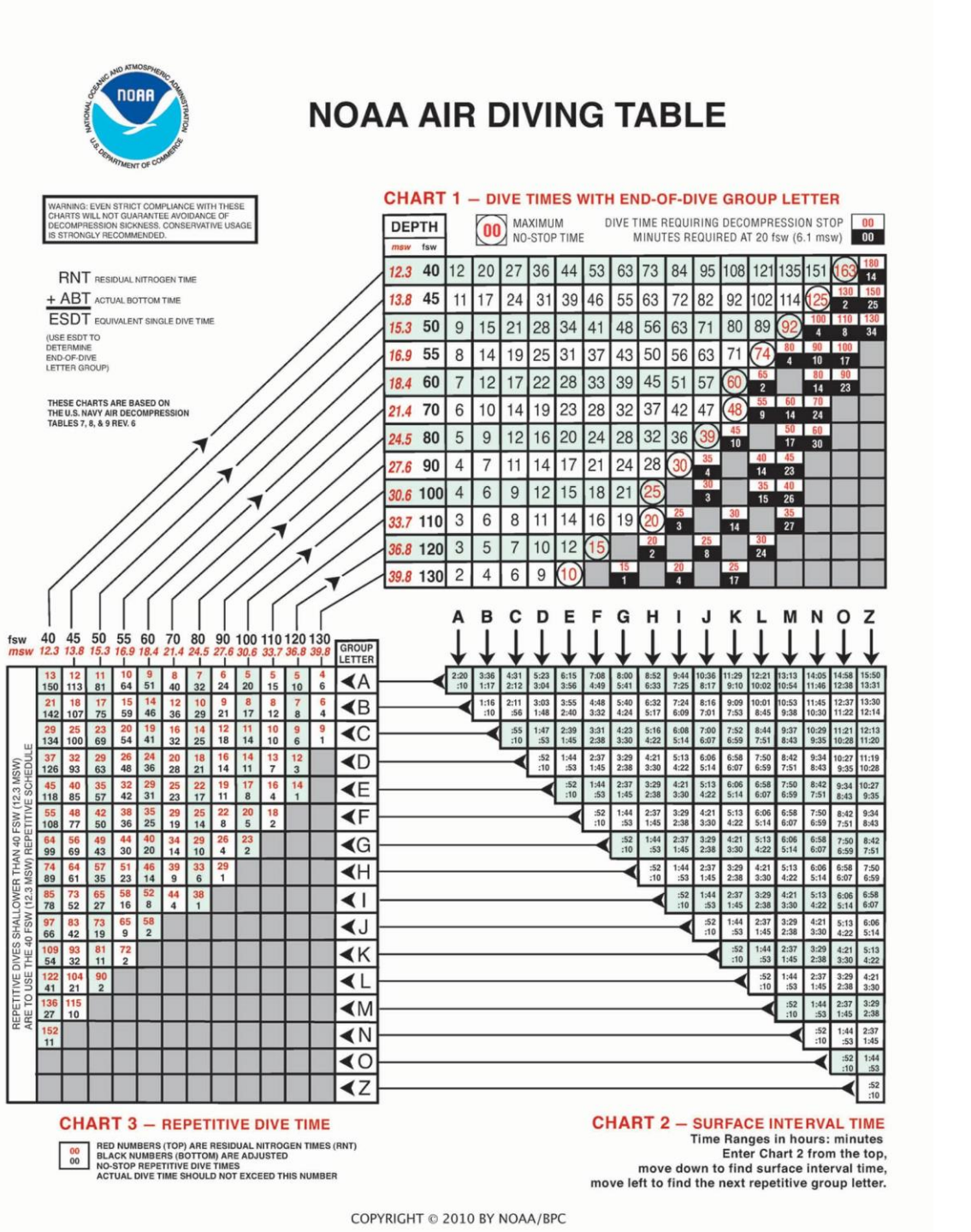

Example

74 fsw 깊이에서 10분간 잠수

1) 비감압한계 시간은?

2) 반복잠수군은?

Depth (fsw)	No-Stop Limit	Repetitive Group Designation															
		A	B	C	D	E	F	G	H	I	J	K	L	M	N	O	Z
10	Unlimited	57	101	158	245	426	*										
15	Unlimited	36	60	88	121	163	217	297	449	*							
20	Unlimited	26	43	61	82	106	133	165	205	256	330	461	*				
25	1102	20	33	47	62	78	97	117	140	166	198	236	285	354	469	992	1102
30	371	17	27	38	50	62	76	91	107	125	145	167	193	223	260	307	371
35	232	14	23	32	42	52	63	74	87	100	115	131	148	168	190	215	232
40	163	12	20	27	36	44	53	63	73	84	95	108	121	135	151	163	
45	125	11	17	24	31	39	46	55	63	72	82	92	102	114	125		
50	92	9	15	21	28	34	41	48	56	63	71	80	89	92			
55	74	8	14	19	25	31	37	43	50	56	63	71	74				
60	63	7	12	17	22	28	33	39	45	51	57	63					
70	48	6	10	14	19	23	28	32	37	42	47	48					
80	39	5	9	12	16	20	24	28	32	36	39						
90	33	4	7	11	14	17	21	24	28	31	33						
100	25	4	6	9	12	15	18	21	25								
110	20	3	6	8	11	14	16	19	20								
120	15	3	5	7	10	12	15										
130	12	2	4	6	9	11	12										
140	10	2	4	6	8	10											
150	8		3	5	7	8											
160	7		3	5	6	7											
170	6			4	6												
180	6			4	5	6											
190	5			3	5												

반복잠수

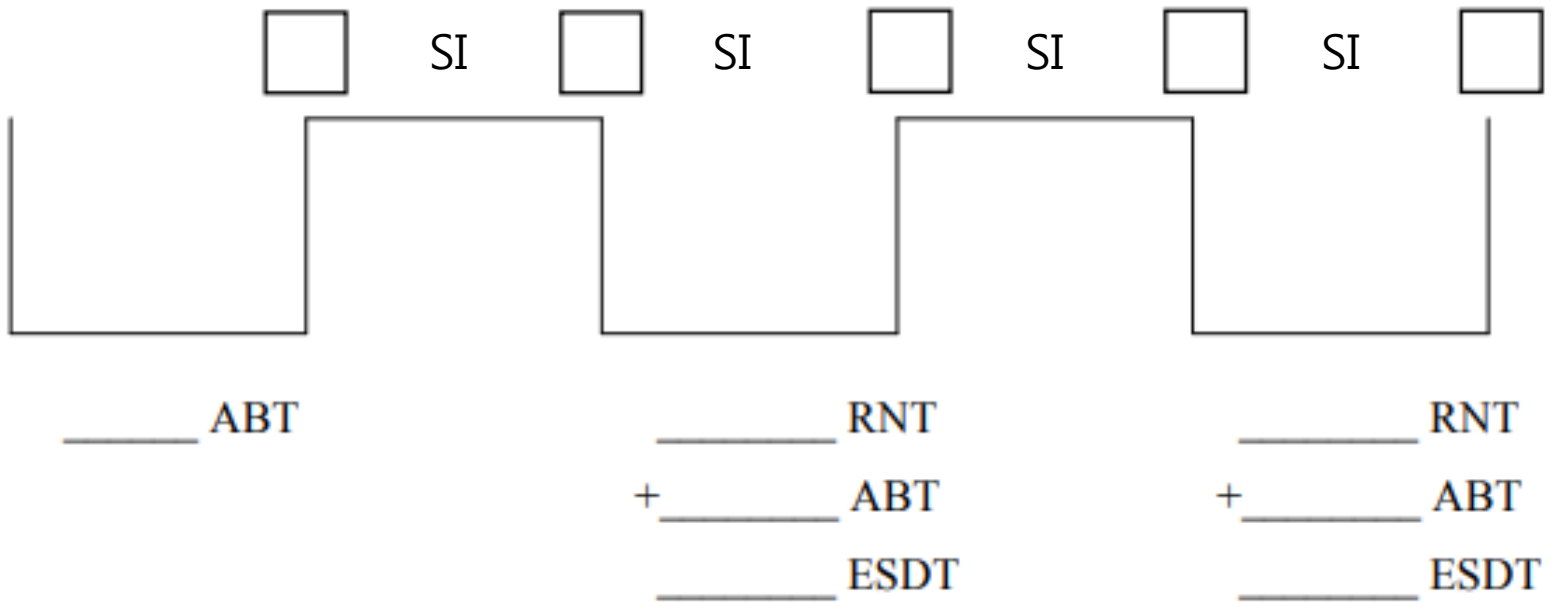

RNT: residual nitrogen time
ABT: actual bottom time
ESDT: equivalent single dive time
SI: surface interval

Example

60 fsw 깊이에서 30분간 잠수 후 두번째 잠수를 50 fsw 에서 60분간 시행할 예정
두번째 잠수에서 감압하지 않고 상승하려면 수면에서의 최소 휴식시간은?

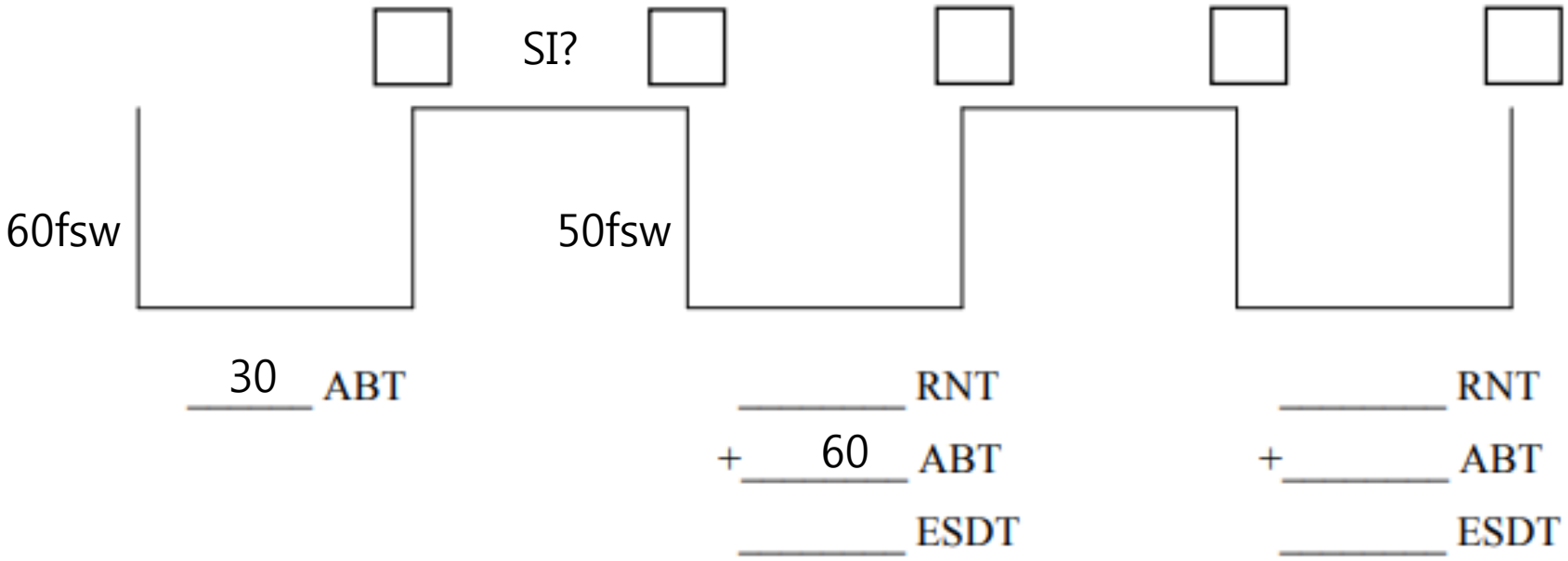

Depth (fsw)	No-Stop Limit	Repetitive Group Designation															
		A	B	C	D	E	F	G	H	I	J	K	L	M	N	O	Z
10	Unlimited	57	101	158	245	426	*										
15	Unlimited	36	60	88	121	163	217	297	449	*							
20	Unlimited	26	43	61	82	106	133	165	205	256	330	461	*				
25	1102	20	33	47	62	78	97	117	140	166	198	236	285	354	469	992	1102
30	371	17	27	38	50	62	76	91	107	125	145	167	193	223	260	307	371
35	232	14	23	32	42	52	63	74	87	100	115	131	148	168	190	215	232
40	163	12	20	27	36	44	53	63	73	84	95	108	121	135	151	163	
45	125	11	17	24	31	39	46	55	63	72	82	92	102	114	125		
50	92	9	15	21	28	34	41	48	56	63	71	80	89	92			
55	74	8	14	19	25	31	37	43	50	56	63	71	74				
60	63	7	12	17	22	28	33	39	45	51	57	63					
70	48	6	10	14	19	23	28	32	37	42	47	48					
80	39	5	9	12	16	20	24	28	32	36	39						
90	33	4	7	11	14	17	21	24	28	31	33						
100	25	4	6	9	12	15	18	21	25								
110	20	3	6	8	11	14	16	19	20								
120	15	3	5	7	10	12	15										
130	12	2	4	6	9	11	12										
140	10	2	4	6	8	10											
150	8		3	5	7	8											
160	7		3	5	6	7											
170	6			4	6												
180	6			4	5	6											
190	5			3	5												

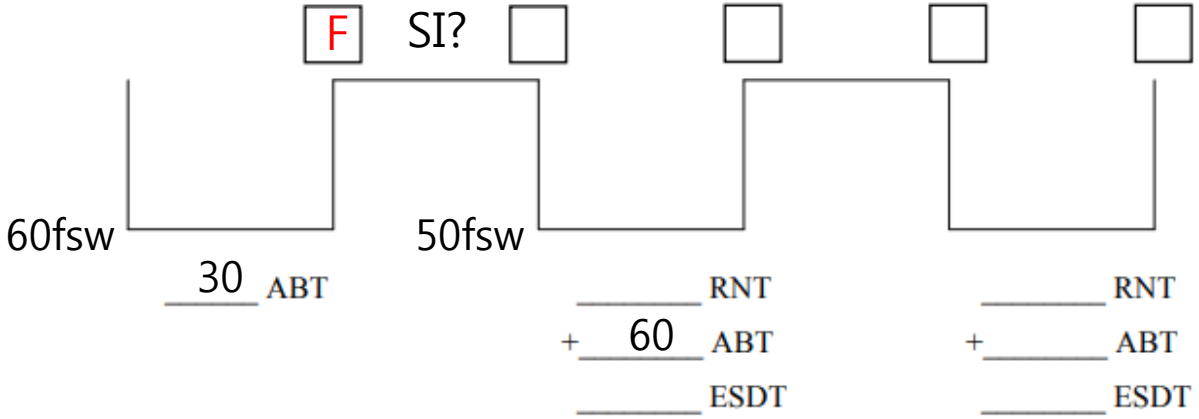

Depth (fsw)	No-Stop Limit	Repetitive Group Designation															
		A	B	C	D	E	F	G	H	I	J	K	L	M	N	O	Z
10	Unlimited	57	101	158	245	426	*										
15	Unlimited	36	60	88	121	163	217	297	449	*							
20	Unlimited	26	43	61	82	106	133	165	205	256	330	461	*				
25	1102	20	33	47	62	78	97	117	140	166	198	236	285	354	469	992	1102
30	371	17	27	38	50	62	76	91	107	125	145	167	193	223	260	307	371
35	232	14	23	32	42	52	63	74	87	100	115	131	148	168	190	215	232
40	163	12	20	27	36	44	53	63	73	84	95	108	121	135	151	163	
45	125	11	17	24	31	39	46	55	63	72	82	92	102	114	125		
50	92	9	15	21	28	34	41	48	56	63	71	80	89	92			
55	74	8	14	19	25	31	37	43	50	56	63	71	74				
60	63	7	12	17	22	28	33	39	45	51	57	63					
70	48	6	10	14	19	23	28	32	37	42	47	48					
80	39	5	9	12	16	20	24	28	32	36	39						
90	33	4	7	11	14	17	21	24	28	31	33						
100	25	4	6	9	12	15	18	21	25								
110	20	3	6	8	11	14	16	19	20								
120	15	3	5	7	10	12	15										
130	12	2	4	6	9	11	12										
140	10	2	4	6	8	10											
150	8		3	5	7	8											
160	7		3	5	6	7											
170	6			4	6												
180	6			4	5	6											
190	5			3	5												

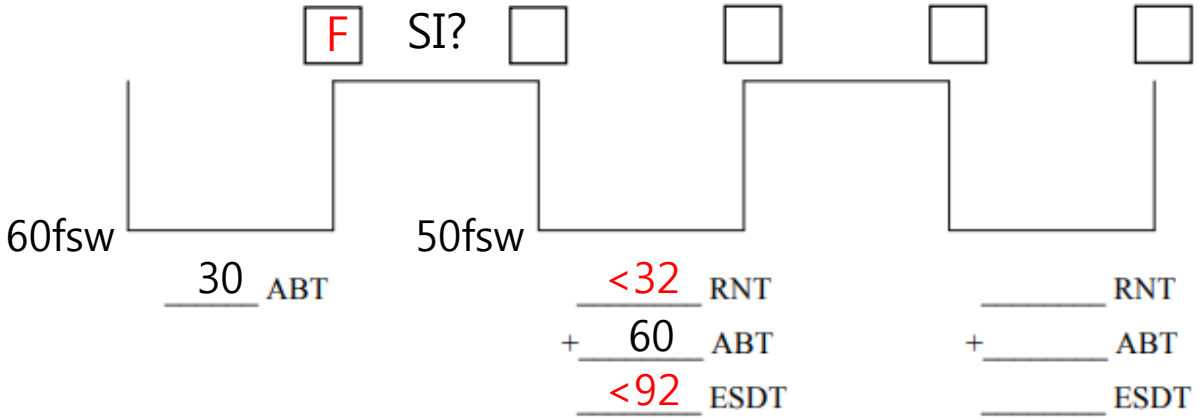

Locate the diver's repetitive group designation from his previous dive along the diagonal line above the table. Read horizontally to the interval in which the diver's surface interval lies.

Next, read vertically downward to the new repetitive group designation. Continue downward in this same column to the row that represents the depth of the repetitive dive. The time given at the intersection is residual nitrogen time, in minutes, to be applied to the repetitive dive.

* Dives following surface intervals longer than this are not repetitive dives. Use actual bottom times in the Air Decompression Tables to compute decompression for such dives.

Repetitive Group at Beginning of Surface Interval

A															:10	2:20 *
B													:10	1:16	1:17	3:36 *
C											:10	:55	:56	2:11	2:12	4:31 *
D										:10	:52	:53	1:48	1:47	3:04	3:03	5:23 *
E									:10	:52	:53	1:44	1:45	2:39	2:40	3:55	3:56	6:15 *
F								:10	:52	:53	1:44	1:45	2:37	2:38	3:31	3:32	4:48	4:49	7:08 *
G							:10	:52	:53	1:44	1:45	2:37	2:38	3:29	3:30	4:23	4:24	5:40	5:41	8:00 *
H						:10	:52	:53	1:44	1:45	2:37	2:38	3:29	3:30	4:21	4:22	5:16	5:17	6:32	6:33	8:52 *
I					:10	:52	:53	1:44	1:45	2:37	2:38	3:29	3:30	4:21	4:22	5:13	5:14	6:08	6:09	7:24	7:25	9:44 *
J				:10	:52	:53	1:44	1:45	2:37	2:38	3:29	3:30	4:21	4:22	5:13	5:14	6:06	6:07	7:00	7:01	8:16	8:17	10:36 *
K				:10	:52	:53	1:44	1:45	2:37	2:38	3:29	3:30	4:21	4:22	5:13	5:14	6:06	6:07	6:58	6:59	7:52	7:53	9:09	9:10	11:29 *
L			:10	:52	:53	1:44	1:45	2:37	2:38	3:29	3:30	4:21	4:22	5:13	5:14	6:06	6:07	6:58	6:59	7:50	7:51	8:44	8:45	10:01	10:02	12:21 *
M			:10	:52	:53	1:44	1:45	2:37	2:38	3:29	3:30	4:21	4:22	5:13	5:14	6:06	6:07	6:58	6:59	7:50	7:51	8:42	8:43	9:37	9:38	10:53	10:54	13:13 *
N		:10	:52	:53	1:44	1:45	2:37	2:38	3:29	3:30	4:21	4:22	5:13	5:14	6:06	6:07	6:58	6:59	7:50	7:51	8:42	8:43	9:34	9:35	10:29	10:30	11:45	11:46	14:05 *
O	:10	:52	:53	1:44	1:45	2:37	2:38	3:29	3:30	4:21	4:22	5:13	5:14	6:06	6:07	6:58	6:59	7:50	7:51	8:42	8:43	9:34	9:35	10:27	10:28	11:21	11:22	12:37	12:38	14:58 *
Z	:10	:52	:53	1:44	1:45	2:37	2:38	3:29	3:30	4:21	4:22	5:13	5:14	6:06	6:07	6:58	6:59	7:50	7:51	8:42	8:43	9:34	9:35	10:27	10:28	11:19	11:20	12:13	12:14	13:30	13:31	15:50 *

Repetitive Group at the End of the Surface Interval

Dive Depth	Z	O	N	M	L	K	J	I	H	G	F	E	D	C	B	A
10	**	**	**	**	**	**	**	**	**	**	**	427	246	159	101	58
15	**	**	**	**	**	**	**	**	450	298	218	164	122	89	61	37
20	**	**	**	**	**	462	331	257	206	166	134	106	83	62	44	27
25	†	†	470	354	286	237	198	167	141	118	98	79	63	48	34	21
30	372	308	261	224	194	168	146	126	108	92	77	63	51	39	28	18
35	245	216	191	169	149	132	116	101	88	75	64	53	43	33	24	15
40	188	169	152	136	122	109	97	85	74	64	55	45	37	29	21	13
45	154	140	127	115	104	93	83	73	64	56	48	40	32	25	18	12
50	131	120	109	99	90	81	73	65	57	49	42	35	29	23	17	11
55	114	105	96	88	80	72	65	58	51	44	38	32	26	20	15	10
60	101	93	86	79	72	65	58	52	46	40	35	29	24	19	14	9
70	83	77	71	65	59	54	49	44	39	34	29	25	20	16	12	8
80	70	65	60	55	51	46	42	38	33	29	25	22	18	14	10	7
90	61	57	52	48	44	41	37	33	29	26	22	19	16	12	9	6
100	54	50	47	43	40	36	33	30	26	23	20	17	14	11	8	5
110	48	45	42	39	36	33	30	27	24	21	18	16	13	10	8	5
120	44	41	38	35	32	30	27	24	22	19	17	14	12	9	7	5
130	40	37	35	32	30	27	25	22	20	18	15	13	11	9	6	4
140	37	34	32	30	27	25	23	21	19	16	14	12	10	8	6	4
150	34	32	30	28	26	23	21	19	17	15	13	11	9	8	6	4
160	32	30	28	26	24	22	20	18	16	14	13	11	9	7	5	4
170	30	28	26	24	22	21	19	17	15	14	12	10	8	7	5	3
180	28	26	25	23	21	19	18	16	14	13	11	10	8	6	5	3
190	26	25	23	22	20	18	17	15	14	12	11	9	8	6	5	3

Residual Nitrogen Times (Minutes)

Locate the diver's repetitive group designation from his previous dive along the diagonal line above the table. Read horizontally to the interval in which the diver's surface interval lies.

Next, read vertically downward to the new repetitive group designation. Continue downward in this same column to the row that represents the depth of the repetitive dive. The time given at the intersection is residual nitrogen time, in minutes, to be applied to the repetitive dive.

* Dives following surface intervals longer than this are not repetitive dives. Use actual bottom times in the Air Decompression Tables to compute decompression for such dives.

Repetitive Group at Beginning of Surface Interval

A														:10	2:20 *	
B													:10	1:16	1:17	3:36 *
C												:10	:55	:56	2:11	2:12	4:31 *
D											:10	:52	:53	1:47	1:48	3:03	3:04	5:23 *
E										:10	:52	:53	1:44	1:45	2:39	2:40	3:55	3:56	6:15 *
F									:10	:52	:53	1:44	1:45	2:37	2:38	3:31	3:32	4:48	4:49	7:08 *
G								:10	:52	:53	1:44	1:45	2:37	2:38	3:29	3:30	4:23	4:24	5:40	5:41	8:00 *
H							:10	:52	:53	1:44	1:45	2:37	2:38	3:29	3:30	4:21	4:22	5:16	5:17	6:32	6:33	8:52 *
I						:10	:52	:53	1:44	1:45	2:37	2:38	3:29	3:30	4:21	4:22	5:13	5:14	6:08	6:09	7:24	7:25	9:44 *
J					:10	:52	:53	1:44	1:45	2:37	2:38	3:29	3:30	4:21	4:22	5:13	5:14	6:06	6:07	7:00	7:01	8:16	8:17	10:36 *
K				:10	:52	:53	1:44	1:45	2:37	2:38	3:29	3:30	4:21	4:22	5:13	5:14	6:06	6:07	6:58	6:59	7:53	9:10		
L			:10	:52	:53	1:44	1:45	2:37	2:38	3:29	3:30	4:21	4:22	5:13	5:14	6:06	6:07	6:58	6:59	7:50				
M		:10	:52	:53	1:44	1:45	2:37	2:38	3:29	3:30	4:21	4:22	5:13	5:14	6:06	6:07	6:58	6:59	7:50	7:51	8:42			
N	:10	:52	:53	1:44	1:45	2:37	2:38	3:29	3:30	4:21	4:22	5:13	5:14	6:06	6:07	6:58	6:59	7:50	7:51	8:42	8:43	9:34		
O	:10	:52	:53	1:44	1:45	2:37	2:38	3:29	3:30	4:21	4:22	5:13	5:14	6:06	6:07	6:58	6:59	7:50	7:51	8:42	8:43	9:34	9:35	10:27
Z	:10	:52	:53	1:44	1:45	2:37	2:38	3:29	3:30	4:21	4:22	5:13	5:14	6:06	6:07	6:58	6:59	7:50	7:51	8:42	8:43	9:34	9:35	10:27	10:28	11:19

Repetitive Group at the End of the Surface Interval

Dive Depth	Z	O	N	M	L	K	J	I	H	G	F	E	D			
10	**	**	**	**	**	**	**	**	**	**	**	427	246			
15	**	**	**	**	**	**	**	**	450	298	218	164	122			
20	**	**	**	**	**	462	331	257	206	166	134	106	83			
25	†	†	470	354	286	237	198	167	141	118	98	79	63			
30	372	308	261	224	194	168	146	126	108	92	77	63	51	39	28	18
35	245	216	191	169	149	132	116	101	88	75	64	53	43	33	24	15
40	188	169	152	136	122	109	97	85	74	64	55	45	37	29	21	13
45	154	140	127	115	104	93	83	73	64	56	48	40	32	25	18	12
50	131	120	109	99	90	81	73	65	57	49	42	35	29	23	17	11
55	114	105	96	88	80	72	65	58	51	44	38	32	26	20	15	10
60	101	93	86	79	72	65	58	52	46	40	35	29	24	19	14	9
70	83	77	71	65	59	54	49	44	39	34	29	25	20	16	12	8
80	70	65	60	55	51	46	42	38	33	29	25	22	18	14	10	7
90	61	57	52	48	44	41	37	33	29	26	22	19	16	12	9	6
100	54	50	47	43	40	36	33	30	26	23	20	17	14	11	8	5
110	48	45	42	39	36	33	30	27	24	21	18	16	13	10	8	5
120	44	41	38	35	32	30	27	24	22	19	17	14	12	9	7	5
130	40	37	35	32	30	27	25	22	20	18	15	13	11	9	6	4
140	37	34	32	30	27	25	23	21	19	16	14	12	10	8	6	4
150	34	32	30	28	26	23	21	19	17	15	13	11	9	8	6	4
160	32	30	28	26	24	22	20	18	16	14	13	11	9	7	5	4
170	30	28	26	24	22	21	19	17	15	14	12	10	8	7	5	3
180	28	26	25	23	21	19	18	16	14	13	11	10	8	6	5	3
190	26	25	23	22	20	18	17	15	14	12	11	9	8	6	5	3

Residual Nitrogen Times (Minutes)

표면간격

1:45

2:37

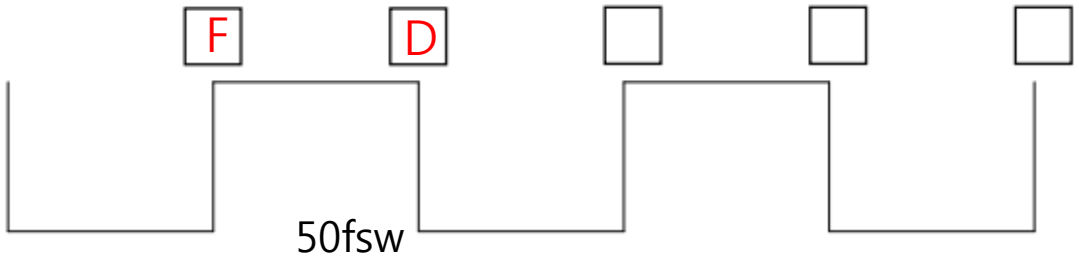

30	ABT	
<32	RNT	
+ 60	ABT	
<92	ESDT	

_____	RNT	
+ _____	ABT	
_____	ESDT	

Example

103 fsw 깊이에서 12분간 잠수를 마치고,
수면에서 1시간 45분간 휴식하였다.
두번째 잠수를 100 fsw 에서 감압하지 않고 상승하려면
최대 해저체류시간은?

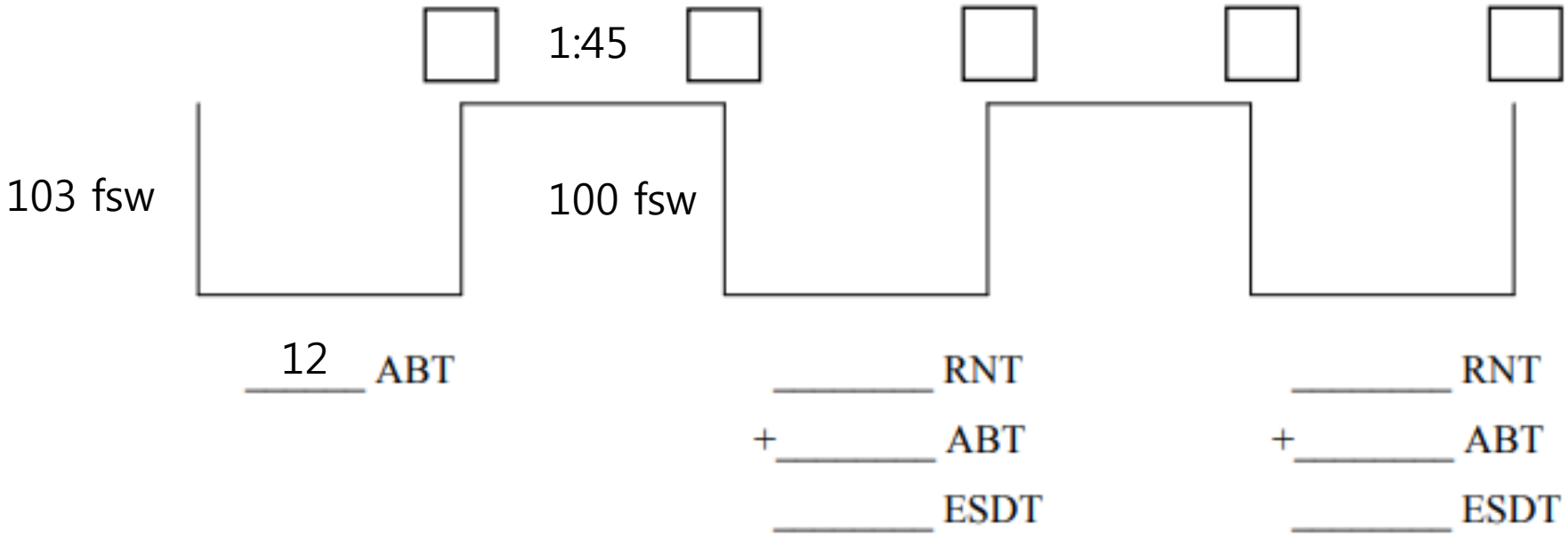

NOAA AIR DIVING TABLE

WARNING: EVEN STRICT COMPLIANCE WITH THESE CHARTS WILL NOT GUARANTEE AVOIDANCE OF DECOMPRESSION SICKNESS. CONSERVATIVE USAGE IS STRONGLY RECOMMENDED.

RNT RESIDUAL NITROGEN TIME
+ ABT ACTUAL BOTTOM TIME
ESDT EQUIVALENT SINGLE DIVE TIME

(USE ESDT TO DETERMINE END-OF-DIVE LETTER GROUP)

THESE CHARTS ARE BASED ON THE U.S. NAVY AIR DECOMPRESSION TABLES 7, 8, & 9 REV. 6

CHART 1 — DIVE TIMES WITH END-OF-DIVE GROUP LETTER

00 MAXIMUM NO-STOP TIME

DIVE TIME REQUIRING DECOMPRESSION STOP (red) / MINUTES REQUIRED AT 20 fsw (6.1 msw) (black)

DEPTH msw	DEPTH fsw	A	B	C	D	E	F	G	H	I	J	K	L	M	N	O	Z
12.3	40	12	20	27	36	44	53	63	73	84	95	108	121	135	151	163	180 / 14
13.8	45	11	17	24	31	39	46	55	63	72	82	92	102	114	125	130 / 2	150 / 25
15.3	50	9	15	21	28	34	41	48	56	63	71	80	89	92	100 / 4	110 / 8	130 / 34
16.9	55	8	14	19	25	31	37	43	50	56	63	71	74	80 / 4	90 / 10	100 / 17	
18.4	60	7	12	17	22	28	33	39	45	51	57	60	65 / 2		80 / 14	90 / 23	
21.4	70	6	10	14	19	23	28	32	37	42	47	48	55 / 9	60 / 14	70 / 24		
24.5	80	5	9	12	16	20	24	28	32	36	39	45 / 10		50 / 17	60 / 30		
27.6	90	4	7	11	14	17	21	24	28	30	35 / 4		40 / 14	45 / 23			
30.6	100	4	6	9	12	15	18	21	25		30 / 3		35 / 15	40 / 26			
33.7	110	3	6	8	11	14	16	19	20	25 / 3		30 / 14		35 / 27			
36.8	120	3	5	7	10	12	15		20 / 2		25 / 8		30 / 24				
39.8	130	2	4	6	9	10		15 / 1		20 / 4		25 / 17					

103 fsw 깊이에서 12분간 잠수를 마치고,
수면에서 1시간 45분간 휴식하였다.
두번째 잠수를 100 fsw 에서 감압하지 않고 상승하려면
최대 해저체류시간은?

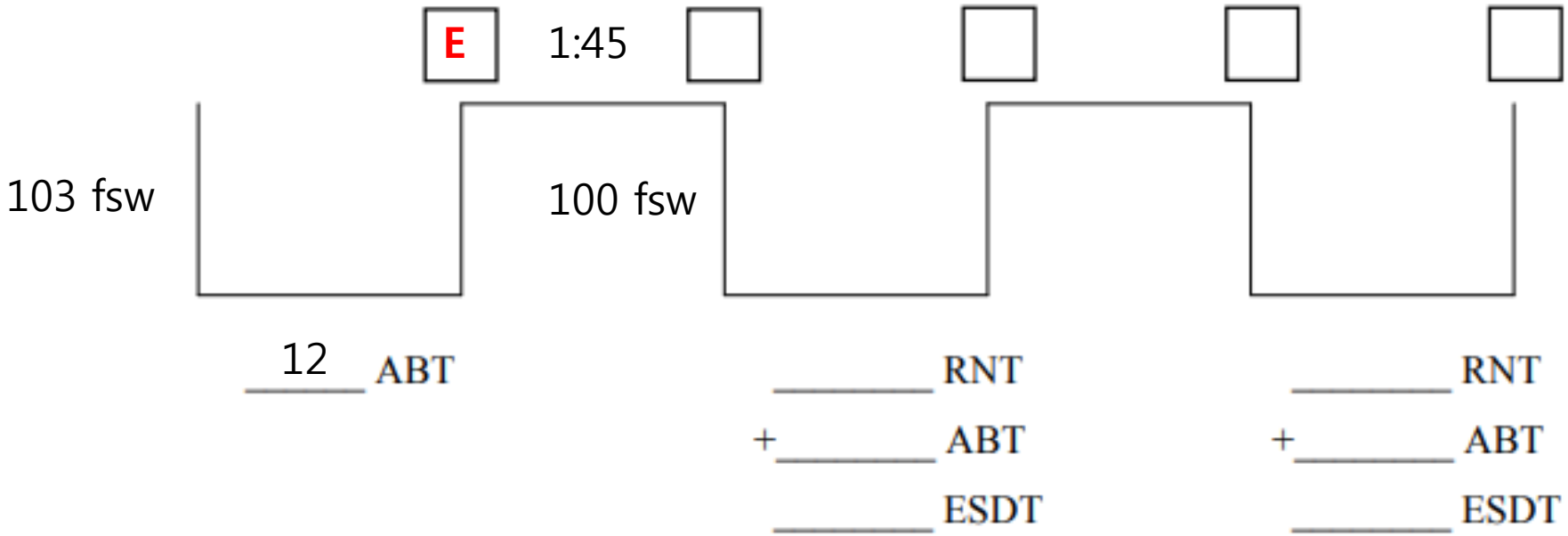

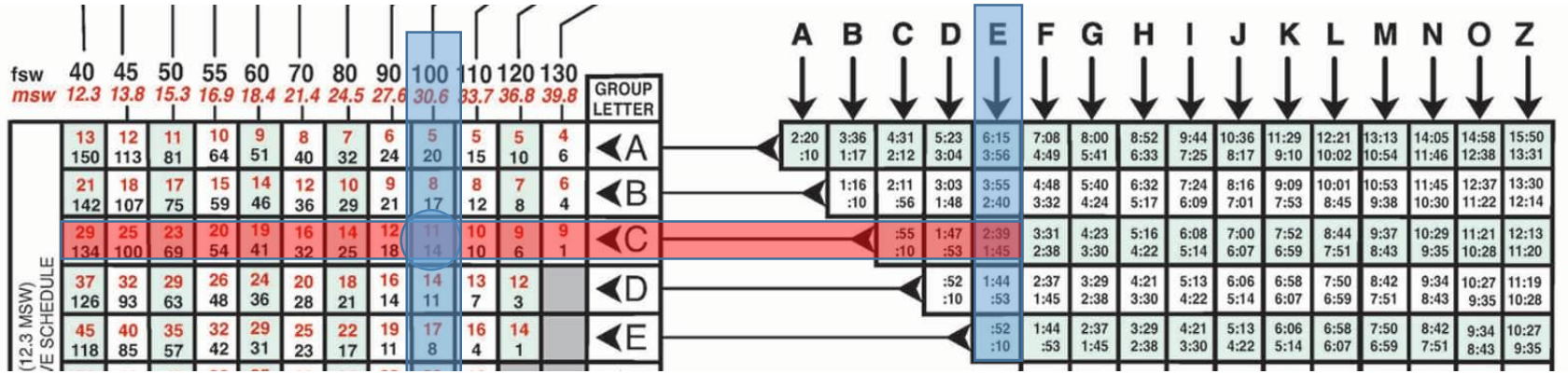

E 1:45 C

103 fsw

100 fsw

12 ABT

11 RNT

+ 14 ABT

25 ESDT

RNT

+ ABT

ESDT

00 BLACK NUMBERS (BOTTOM) ARE ADJUSTED
NO-STOP REPETITIVE DIVE TIMES
ACTUAL DIVE TIME SHOULD NOT EXCEED THIS NUMBER

Enter Chart 2 from the top,
move down to find surface interval time,
move left to find the next repetitive group letter.

Example

다음과 같이 3회의 잠수를 계획하고 있다.
감압없이 잠수를 하기 위한 최소 표면시간은?

Dive#1 깊이 90fsw, 해저체류시간 22분
Dive#2 깊이 80fsw, 해저체류시간 15분
Dive#3 깊이 60fsw, 해저체류시간 30분

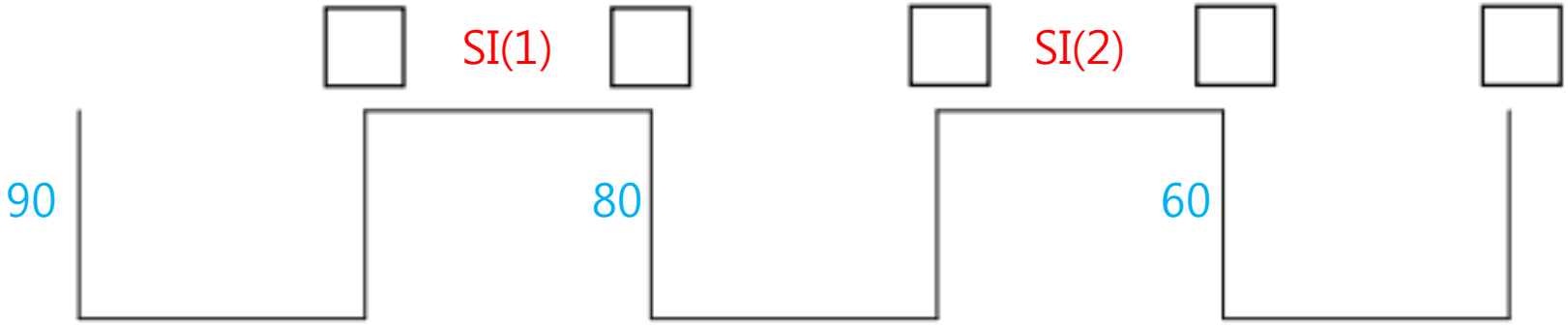

22 ABT	_____ RNT	_____ RNT
	+ 15 ABT	+ 30 ABT
	_____ ESDT	_____ ESDT

NOAA AIR DIVING TABLE

WARNING: EVEN STRICT COMPLIANCE WITH THESE CHARTS WILL NOT GUARANTEE AVOIDANCE OF DECOMPRESSION SICKNESS. CONSERVATIVE USAGE IS STRONGLY RECOMMENDED.

RNT RESIDUAL NITROGEN TIME
+ ABT ACTUAL BOTTOM TIME
ESDT EQUIVALENT SINGLE DIVE TIME

(USE ESDT TO DETERMINE END-OF-DIVE LETTER GROUP)

THESE CHARTS ARE BASED ON THE U.S. NAVY AIR DECOMPRESSION TABLES 7, 8, & 9 REV. 6

CHART 1 — DIVE TIMES WITH END-OF-DIVE GROUP LETTER

00 MAXIMUM NO-STOP TIME

DIVE TIME REQUIRING DECOMPRESSION STOP MINUTES REQUIRED AT 20 fsw (6.1 msw)

DEPTH msw	DEPTH fsw	A	B	C	D	E	F	G	H	I	J	K	L	M	N	O	Z
12.3	40	12	20	27	36	44	53	63	73	84	95	108	121	135	151	163	180 14
13.8	45	11	17	24	31	39	46	55	63	72	82	92	102	114	125	130 2	150 25
15.3	50	9	15	21	28	34	41	48	56	63	71	80	89	92	100 4	110 8	130 34
16.9	55	8	14	19	25	31	37	43	50	56	63	71	74	80 4	90 10	100 17	
18.4	60	7	12	17	22	28	33	39	45	51	57	60	65 2		80 14	90 23	
21.4	70	6	10	14	19	23	28	32	37	42	47	48	55 9	60 14	70 24		
24.5	80	5	9	12	16	20	24	28	32	36	39	45 10		50 17	60 30		
27.6	90	4	7	11	14	17	21	24	28	30	35 4		40 14	45 23			
30.6	100	4	6	9	12	15	18	21	25		30 3		35 15	40 26			
33.7	110	3	6	8	11	14	16	19	20	25 3		30 14		35 27			
36.8	120	3	5	7	10	12	15		20 2		25 8		30 24				
39.8	130	2	4	6	9	10		15 1		20 4		25 17					

90fsw, 22분

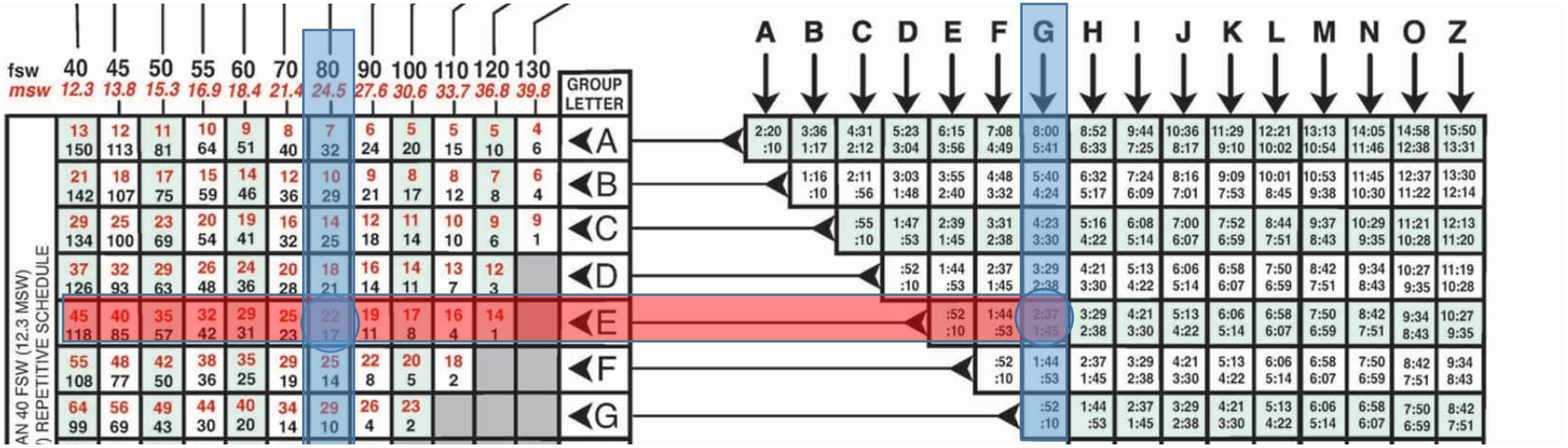

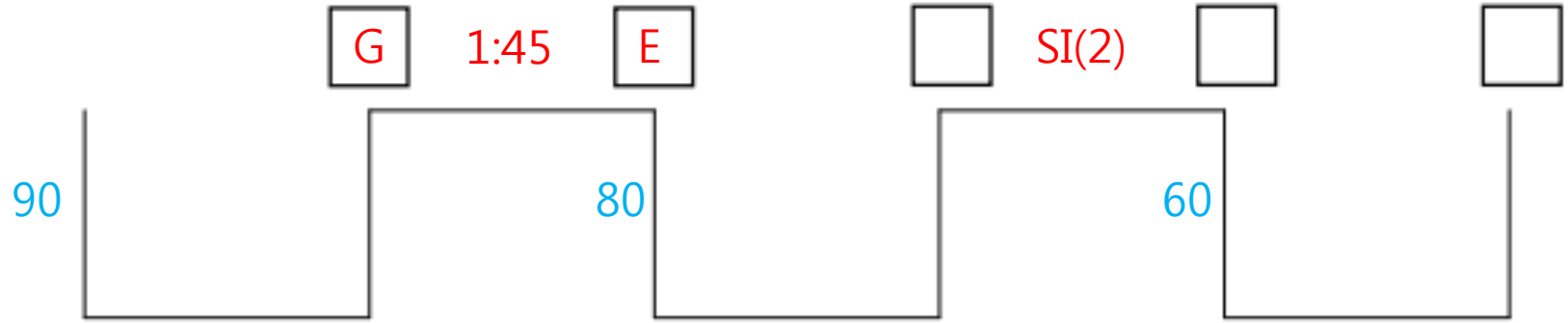

22 ABT

22 RNT
+ 15 ABT
37 ESDT

RNT
+ 30 ABT
ESDT

NOAA AIR DIVING TABLE

WARNING: EVEN STRICT COMPLIANCE WITH THESE CHARTS WILL NOT GUARANTEE AVOIDANCE OF DECOMPRESSION SICKNESS. CONSERVATIVE USAGE IS STRONGLY RECOMMENDED.

RNT RESIDUAL NITROGEN TIME
+ ABT ACTUAL BOTTOM TIME
ESDT EQUIVALENT SINGLE DIVE TIME

(USE ESDT TO DETERMINE END-OF-DIVE LETTER GROUP)

THESE CHARTS ARE BASED ON THE U.S. NAVY AIR DECOMPRESSION TABLES 7, 8, & 9 REV. 6

CHART 1 — DIVE TIMES WITH END-OF-DIVE GROUP LETTER

00 MAXIMUM NO-STOP TIME

DIVE TIME REQUIRING DECOMPRESSION STOP
MINUTES REQUIRED AT 20 fsw (6.1 msw)

DEPTH msw	DEPTH fsw	A	B	C	D	E	F	G	H	I	J	K	L	M	N	O	Z
12.3	40	12	20	27	36	44	53	63	73	84	95	108	121	135	151	163	180 / 14
13.8	45	11	17	24	31	39	46	55	63	72	82	92	102	114	125	130 / 2	150 / 25
15.3	50	9	15	21	28	34	41	48	56	63	71	80	89	92	100 / 4	110 / 8	130 / 34
16.9	55	8	14	19	25	31	37	43	50	56	63	71	74	80 / 4	90 / 10	100 / 17	
18.4	60	7	12	17	22	28	33	39	45	51	57	60	65 / 2		80 / 14	90 / 23	
21.4	70	6	10	14	19	23	28	32	37	42	47	48	55 / 9	60 / 14	70 / 24		
24.5	80	5	9	12	16	20	24	28	32	36	39	45 / 10		50 / 17	60 / 30		
27.6	90	4	7	11	14	17	21	24	28	30	35 / 4		40 / 14	45 / 23			
30.6	100	4	6	9	12	15	18	21	25		30 / 3		35 / 15	40 / 26			
33.7	110	3	6	8	11	14	16	19	20	25 / 3		30 / 14		35 / 27			
36.8	120	3	5	7	10	12	15		20 / 2		25 / 8		30 / 24				
39.8	130	2	4	6	9	10		15 / 1		20 / 4		25 / 17					

80fsw, 15분

Actual bottom time: 22+15
= 37분

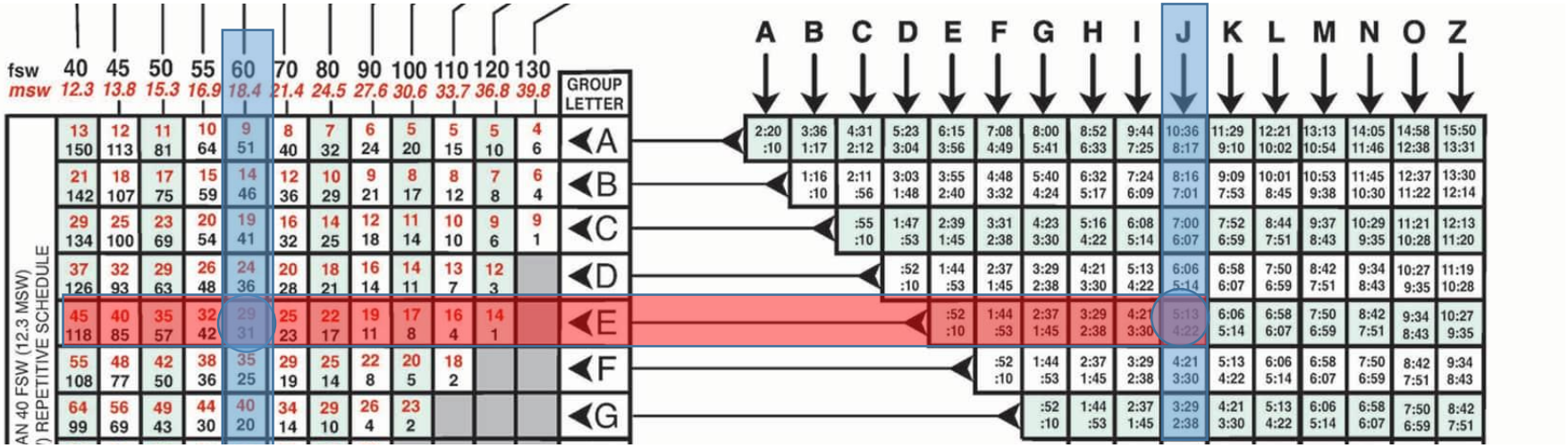

G 1:45 E J 4:22 E

90 80 60

22 ABT

22 RNT
+ 15 ABT
37 ESDT

29 RNT
+ 30 ABT
59 ESDT

Korean Academy of
Undersea and Hyperbaric Medicine

Thank you

대한고압의학회
Korean Academy of Undersea and Hyperbaric Medicine